PROPRIETARY AND CONFIDENTIAL

THE INFORMATION CONTAINED IN THIS DRAWING IS THE SOLE PROPERTY OF TRAKLOC. ANY REPRODUCTION IN PART OR AS A WHOLE WITHOUT THE WRITTEN PERMISSION OF TRAKLOC IS PROHIBITED.

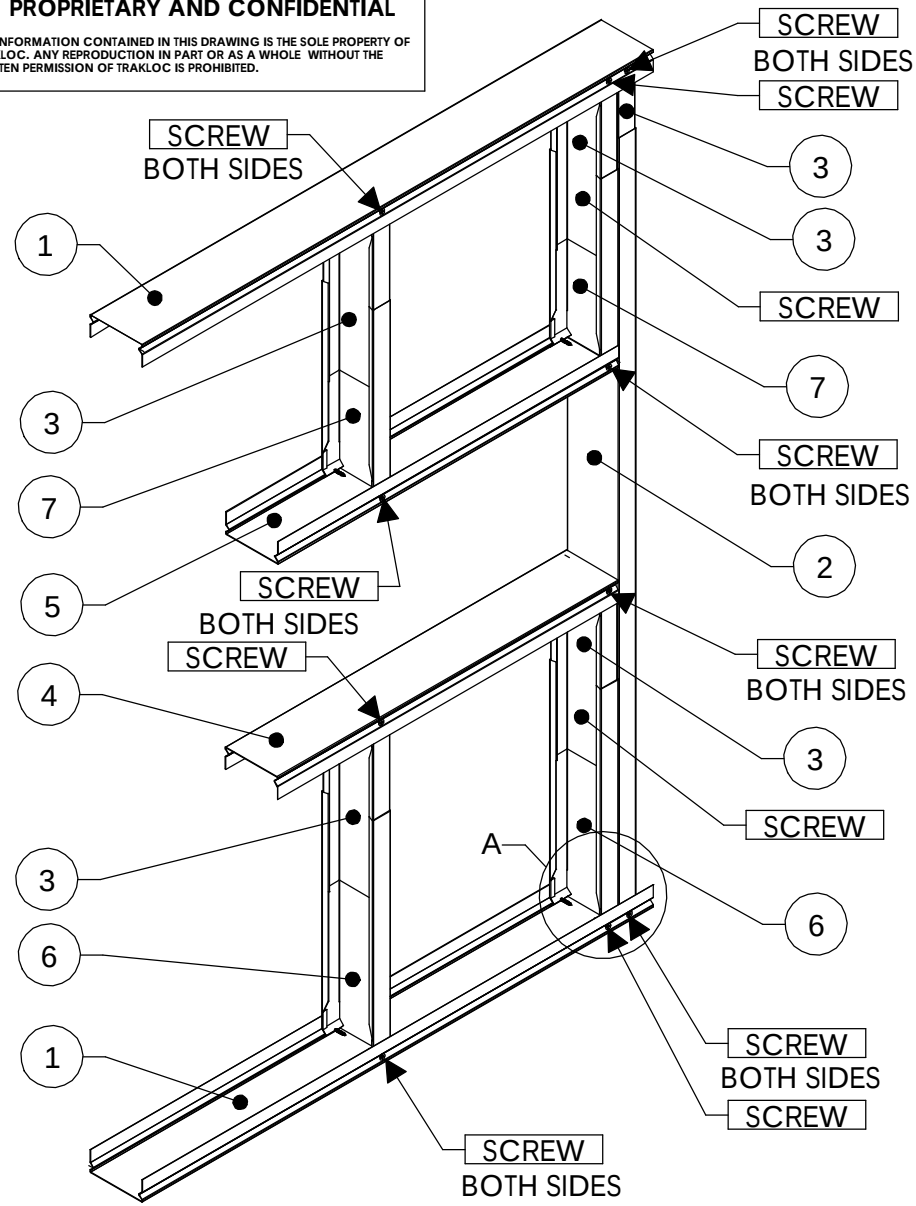

ITEM NO.	PART NO.
1	TTS TRAK
2	TSO STUD
3	TSE SLIP EXT
4	TTS TRAK sill
5	TTS TRAK header
6	TSO STUD SILL
7	TSO STUD HEADER
8	SCREW

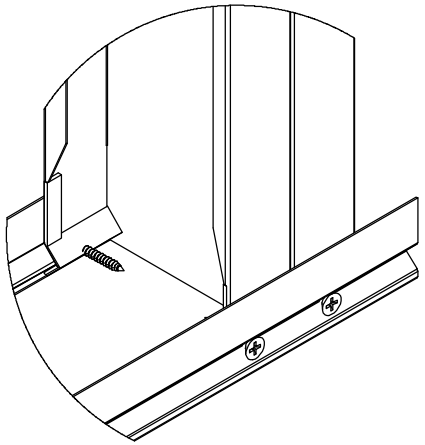

DETAIL A
SCALE 1 : 1.25

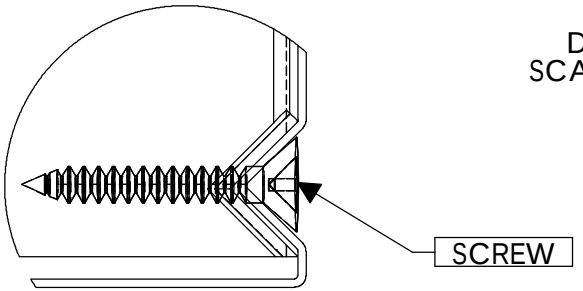

DETAIL A
SCALE 3 : 1

SYM	CHG No.	CHANGE	DATE

Window-Non-Load Bearing
Single Track Header
Single Jamb

TITLE: **WINDOW SINGLE JAM ASSEMBLY**

TRAKLOC QUANTITY: **1**

UNLESS OTHERWISE SPECIFIED:
TOLERANCES: DIMENSIONS: INCHES
LINEAR: X ±0.030, X.X ±0.020, X.XX ±0.010, X.XXX ±0.0025, X.XXXX ± HOLD
ANGLE: 1 DEG, 1/2 DEG, 1/4 DEG, 1/10 DEG, 15 SEC
OTHERS: CHAMFER ALL EDGES .04-.05; RAD. CORNERS .015-.035; SURFACE FINISH = 8 THRU 16

	DATE	NAME
DRAWN	2/15/2005	JLB
CHECKED	2/15/2005	JLB
ENG APPR.	2/15/2005	JLB
MFG APPR.	2/15/2005	JLB
Q.A.	2/15/2005	JLB

MATERIAL: --
FINISH: --
DO NOT SCALE DRAWING

SIZE: C
DWG. NO.: T-ASS-003
REV: A
SCALE: NONE
SHEET 1 OF 1
2/15/2005