PROPRIETARY AND CONFIDENTIAL

THE INFORMATION CONTAINED IN THIS DRAWING IS THE SOLE PROPERTY OF TRAKLOC. ANY REPRODUCTION IN PART OR AS A WHOLE WITHOUT THE WRITTEN PERMISSION OF TRAKLOC IS PROHIBITED.

ITEM NO.	PART NO.
1	TTS TRAK
2	TSO STUD
3	TSE SLIP EXT
4	TSO STUD
5	TSO STUD

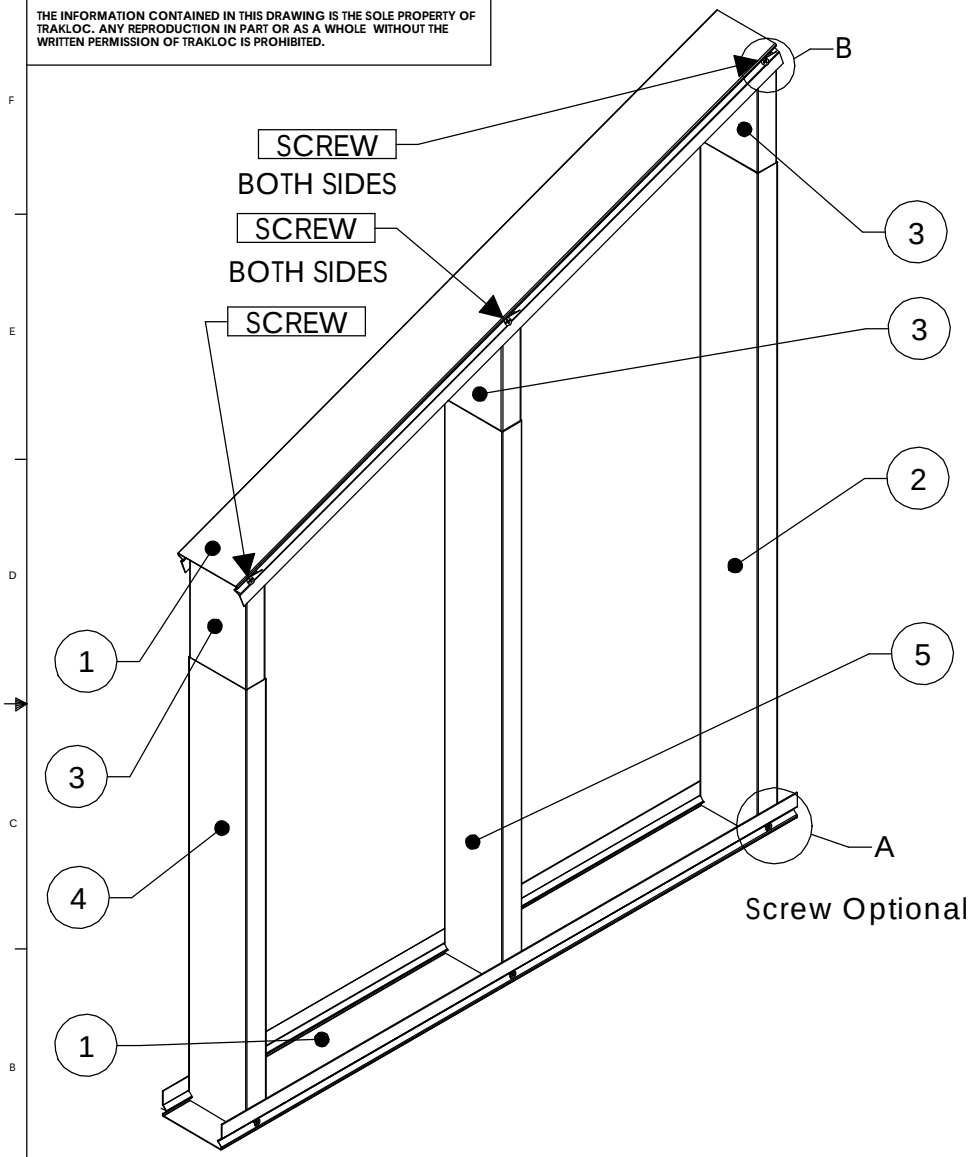

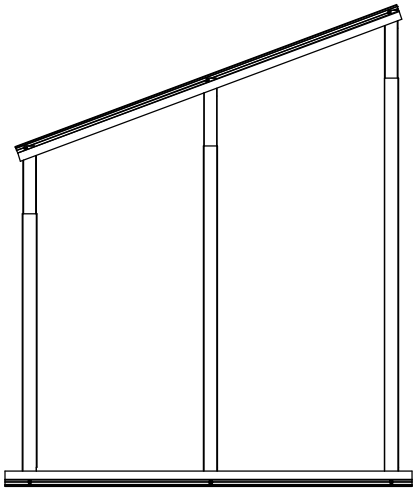

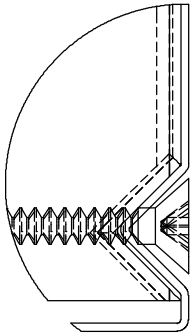

DETAIL A
SCALE 3 : 1

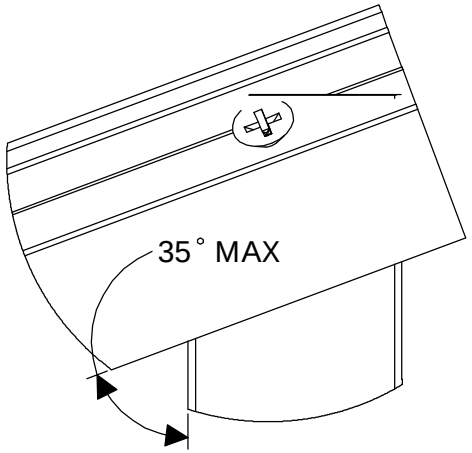

DETAIL B
SCALE 2 : 1

SYM	CHG No.	CHANGE	DATE

STUD RAKE ASSEMBLY

TITLE: **STUD RAKE ASSEMBLY**

TRAKLOC QUANTITY: **1**

UNLESS OTHERWISE SPECIFIED:

TOLERANCES:	DIMENSIONS: INCHES	
LINEAR:	ANGLE:	OTHERS:
X ±0.030 X.X ±0.020 X.XX ±0.010 X.XXX ±0.0025 X.XXXX ± HOLD	1 DEG 1/2 DEG 1/4 DEG 1/10 DEG 15 SEC	CHAMFER ALL EDGES .04-.05 RAD. CORNERS .015-.035 SURFACE FINISH = 8 THRU 16

	DATE	NAME
DRAWN	2/25/2005	JLB
CHECKED	2/25/2005	JLB
ENG APPR.	2/25/2005	JLB
MFG APPR.	2/25/2005	JLB
Q.A.	2/25/2005	JLB

MATERIAL: --

FINISH: --

DO NOT SCALE DRAWING

SIZE: C

DWG. NO. T-ASS-005

REV A

SCALE: NONE

SHEET 1 OF 1

2/25/2005